FOR SERVICE TECHNICIAN'S USE ONLY

Tech Sheet | **NOTE:** This sheet contains important Technical Service Data | **Do Not Remove Or Destroy**

⚠ DANGER

Electrical Shock Hazard

Only authorized technicians should perform diagnostic voltage measurements.

After performing voltage measurements, disconnect power before servicing.

Failure to follow these instructions can result in death or electrical shock.

⚠ WARNING

Electrical Shock Hazard

Disconnect all power supplies before servicing.

Replace all parts and panels before operating.

Failure to do so can result in death or electrical shock.

NOTE: RC/FC lights will turn ON if door is Open anytime during service mode.

Voltage Measurement Safety Information

When performing live voltage measurements, you must do the following:

- **Verify the controls are in the off position so that the appliance does not start when energized.**
- **Allow enough space to perform the voltage measurements without obstructions.**
- **Keep other people a safe distance away from the appliance to prevent potential injury.**
- **Always use the proper testing equipment.**
- **After voltage measurements, always disconnect power before servicing.**

No-Load Performance, Controls in Normal Position

	Kw/24 hr/± 0.4			Percent Run Time ± 10%			Cycles/24 hr/ ± 10%			Refrigerator/ Pantry Compartment Average Food Temperature ± 4°F			Freezer Compartment Average Food Temperature ± 4°F			Ice Maker Compartment Average Temperature ± 5°F		
Ambient °F	70°	90°	110°	70°	90°	110°	70°	90°	110°	70°	90°	110°	70°	90°	110°	70°	90°	110°
25 cu. ft.	1.0	1.8	2.4	30	50	75	25	25	25	38	38	38	0	0	0	15	15	15

Temperature Relationship Test Chart

	Evaporator Outlet ± 3°F		Evaporator Inlet ± 3°F		Suction Line ± 7°F		Average Total Wattage ± 10%		Suction Pressure ± 2 PSIG		Head Pressure ± 5 PSIG	
Ambient °F	70°	90°	70°	90°	70°	90°	70°	90°	70°	90°	70°	90°
25 cu. ft.	-20	-17	-20	-17	85	105	145	150	0	0	85	135

Check for proper voltage by completing the following steps:

1. Unplug refrigerator or disconnect power.
2. Connect voltage measurement equipment.
3. Plug in refrigerator or reconnect power and confirm voltage reading.
4. Unplug refrigerator or disconnect power.

Component Specifications

Component	Specifications all parts 115 VAC/60Hz unless noted
Compressor	BTUH ..... 717 BTUH NC1116HZ Watt ..... 60 Hz / 101 W Current lock rotor ..... 20.1 A ± 15% Current full load ..... 1.0 A ± 15% Resistance run windings ..... 4.8 Ω ± 10% Resistance start windings ..... 4.6 Ω ± 10%
Relay	5SP
Compressor Run Capacitor	Volt ..... 180 VAC Capacitance ..... 12 µfd ± 10%
Electric Damper Control	Maximum closing time ..... 16 seconds Temperature rating ..... -11°F - 110°F RPM 3
Thermistor	Temperature ..... Resistence 77°F ..... 2700 Ω ± 5.0% 36°F ..... 7964 Ω ± 1.0% 0°F ..... 23345 Ω ± 2.0%
Condenser Motor	Rotation (facing end opposite shaft) ..... Clockwise 1120 RPM RPM ..... 1120 RPM Watt ..... 3.4 ± 15% W @ 115 VAC Current ..... 0.085 A ± 15% @ 115 VAC
Evaporator Fan Motor	Rotation (facing end opposite shaft) ..... Clockwise RPM ..... 3000 RPM Watt ..... 5.5 ± 15% W @ 12 VDC **Note:** Fan blade must be fully seated on shaft to achieve proper airflow.
Overload/Relay	Ult. trip A @ 158°F (70°C) ..... 3.06 A ± 15% Close temperature ..... 142°F ± 16°F Open temperature ..... 221°F ± 9°F Short time trip (seconds) ..... 10 seconds ± 5 Short time trip (A @77°F (25°C)) ..... 14.3 A ± 2 A
Thermostat (Defrost)	Volt ..... 120/240 VAC Watt ..... 495 W Current ..... 5.8/3.75 A Resistance across terminals: 56k Ω Above 42°F ± 5° ..... Open Below 12°F ± 7° ..... Closed
Evaporator Heater	Volt ..... 115 VAC Wattage ..... 470 ± 5% W @ 115 VAC (25 cu ft models) Resistance ..... 29.0 ± 5% Ω @ 115 VAC (25 cu ft models)
Control Board	Volt ..... 120 VAC, 60Hz See control board for diagnostics.
Dual Water Valve	Wattage ..... 35 W (Blue coil) 20 W (Yellow coil)
Ice Box Fan	Rotation (facing end opposite shaft) ..... Clockwise RPM ..... 3000 RPM Watt ..... 5.5 ± 15% W @ 12 VDC **Note:** Fan blade must be fully seated on shaft to achieve proper airflow.
Light Switch	Type ..... SPST NC Volt ..... 125/250 VAC Current ..... 8/4 A

Control Board Troubleshooting

Press any key to activate

Service Tip: If the control does not respond, remove power from the entire appliance for 10 seconds. Reapply power, wait 10 seconds, and perform the service diagnostics routine.

NOTE: The ice door motor cycles 1 minute after on ice dispensing.

SWITCH DIAGRAM

SW1 SW2 SW3 SW4 SW5 SW6

To ENTER SERVICE DIAGNOSTICS Mode:

Press SW1 and SW2 simultaneously for 3 seconds. Release both buttons when you hear the CHIME indicator. Unit must not be in Lockout prior to entering SERVICE DIAGNOSTIC MODE.

The display will show 01 to indicate the control is in step 1 of the diagnostics routine.

To EXIT SERVICE DIAGNOSTICS Mode:

Do one of the following 3 options:

Press SW1 and SW2 simultaneously for 3 seconds.

Disconnect the product from power.

Allow 20 minutes to pass.

Following the exit of the diagnostic mode, the controls will then resume normal operation.

Cooling diagnostics are steps 1-7 and 32-38. Dispensing diagnostics are steps 8-31.

Each step must be manually advanced. Press SW5 to move to the next step in the sequence. Press SW4 to back up in the sequence to the previous step. Diagnostics will begin at Step 1. Each step is displayed in the two digits of the dispenser user interface display. The step results are displayed in the two digits on dispenser user interface display 2 seconds after the step number is displayed. An amber order filter light will be shown to designate that the step number is being displayed and a red replace filter light will be shown to designate that the status of the step is being displayed. All button and pad inputs shall be ignored and all inputs shall be off except as described in the actions for each step.

Service Test - 1 FC Thermistor

The board will check the resistance value of the thermistor and display flashes results on the RC Temp display. (**01** = Pass, **02** = Open, **03** = Short)

Service Test - 2 RC Thermistor

The board will check the resistance value of the thermistor and display the results on the RC Temp display. (**01** = Pass, **02** = Open, **03** = Short)

Service Test - 3 Evaporator Fan Motor and Air Baffle Motor

Turns on the evaporator fan motor and opens air baffle. Verify air flow from the evaporator fan. Check to see if the baffle opens. Status indicator will be blank. (01=Air Baffle Open, 02=Air Baffle Closed)

NOTE: Ice box fan turns on simultaneously.

Service Test - 4 Compressor/Condenser Fan Motor

Press SW3 to activate compressor/condenser fan circuit. (01 = ON, 02 = OFF)

Service Test - 6 Defrost Heater/Bi-metal

NOTE: If bi-metal is open, it will need to be by-passed for heater to operate. Heater should be ON. Display will be blank until a valid reading is displayed. (01 = Bi-metal closed, 02 = Bi-metal open)

Service Test - 7 Defrost Mode

The Defrost mode can be set by using SW3. In ADC mode the product will automatically defrost after a minimum of 8 hours of compressor runtime up to maximum of 96 hours of compressor runtime, depending upon product usage. In Basic mode the product will automatically defrost after 8 hours of compressor runtime. (01 = ADC ON, 02 = Basic mode ON) 8 hour timer

Service Test - 8 All UI indicators

Verify that all LED indicators and UI display digits turn ON automatically. All indicators ON for 30 second time-out.

Service Test - 9 UI Button and Pad Test

Displays the UI Buttons and Ice and Water pads status as described in the Component Status Indicator column, below.

NOTE: Do not use SW4 and SW5 as these are used only to navigate through the Service Diagnostics.

Press	Digit 1	Digit 2
SW1	1	
SW2	2	
SW3	3	
SW6	6	
Ice Pad		1
Water Pad		2
Ice and Water Pads		3

NOTE: SW4 and SW5 are used for navigation and are not displayed.

Service Test - 11 Dispenser Lighting

Pressing SW3 will change the dispenser lighting setting from OFF (0%) to ON (100%) to DIM (50%). Status indicator is blank.

Service Test - 12 Accent Light Turns On

Service Test - 16 RC Door Switch Input

Displays the RC Door status in realtime on the UI display. Verify that the open and close status display correctly. (**01** = RC Door open, **02** = RC Door closed)

Service Test - 17 FC Door Switch Input

Displays the FC Door status in realtime on the UI display. Verify that the open and close status display correctly. (**01** = FC Door Open, **02** = FC Door Closed)

Service Test - 18 Ice Door Motor

Displays the Ice Door stepper motor state on the UI display. Press the ice paddle and verify that the mechanical operation of the ice door corresponds to the component status indicator. NOTE: Ice door will have a delay in closing after an ice paddle is released. (**01** = Closed, **02** = Opening, **03** = Open, **04** = Closing)

Service Test - 20 Water Filter Usage Rating

Displays in two sequential flashes the total water usage rating in gallons for the water filter on the UI display. Wait until dash is displayed which means end of the number (00/0- to 99/9-).
Example: 123 will be displayed as: 12 3-

Service Test - 21 Water Filter Time Rating

Displays in two sequential flashes the total time rating in days for the water filter on the UI display. Wait until dash is displayed which means end of the number (00/0- to 99/9-).
Example: 123 will be displayed as: 12 3-

Service Test - 22 Water Filter Usage

Displays in two sequential flashes the current water filter status in gallons used since last reset on the UI display. Wait until dash is displayed which means end of the number (00/0- to 99/9-).
Example: 123 will be displayed as: 12 3-

Service Test - 23 Water Filter Time

Displays in two sequential flashes the current water filter status in days since last reset on the UI display. Wait until dash is displayed which means end of the number (00/0- to 99/9-).
Example: 123 will be displayed as: 12 3-

Service Test - 24 Water Filter Reset

Display in two sequential flashes the current times the water filter was reset on the UI display. Wait until dash is displayed which means end of the number (00/0- to 99/9-).
Example: 123 will be displayed as: 12 3-

Service Test - 25 Water dispensing and icemaker fill test

Confirm Icemaker valve in fill test. The the icemaker will show icemaker fill status. Press the water pad to initiate the water dispense.

NOTE:

Jump (short circuit) icemaker thermostat T and H to initiate icemaker fill.
Avoid Water Dispensing test when Icemaker Fill Digit changes to "1."
The Water Dispensing test can be performed during any other time.

Digit 1	**0**=Icemaker fill OFF, **1**=Icemaker fill ON
Digit 2	**0**=Water valve OFF, **1**=Water valve ON

Service Test - 26 Main Control Software Version

NOTE: Not normally used.

Displays in three sequential flashes the Main Control software version on the UI display.

NOTE: This is repeatedly displayed during all time in this step. 00/00/00 to 99/99/99

Service Test - 27 Dispenser UI Control Software Version

Displays in three sequential flashes the Dispenser UI Control software version on the UI display.

NOTE: This is repeatedly displayed during all time in this step. 00/00/00 to 99/99/99

Service Test - 31 Touch Input Module Software

Displays in three sequential flashes the Dispenser UI Control software version on the UI display.

NOTE: This is repeatedly displayed during all time in this step. 00/00/00 to 99/99/99

Service Test - 32 Ambient Thermistor UI Control

This is an internal board test. The board will check the resistance value of the thermistor and display the results. (**01** = Pass, **02** = Open, **03** = Short)

Service Test - 33 Humidity Sensor UI Control

Relative Humidity Test: Humidity % Value **0-99** = pass or **Er** = Fail

Service Test - 34 Vertical Mullion Heater Mode

Set the Vertical Mullion Heater Sensor Mode by selecting SW3. (**01** = Sensor Operation On, **02** = Sensor Operation Off) (Heater on 100%)

Service Test - 35 Vertical Mullion Heater Status

Control the Vertical Mullion Heater by selecting SW3 (toggle between On and Off) (**01** = ON, **02** = OFF)

Service Test - 36 Ice Box Fan

Check for fan operation. **NOTE:** Evaporator fan turns on simultaneously.

Service Test - 37 Ice Box Thermistor

The board will check the resistance value of the thermistor and display the results on the RC Temp display. (**01** = Pass, **02** = Open, **03** = Short)

Service Test - 38 Forced Defrost mode

Set the Forced Defrost Mode by selecting SW3. **OF** = No Forced Defrost, **Sh** = Short Defrost, **Lo** = Long Defrost

Service Test - 40 Horizontal Mullion Heater Mode

Set the Horizontal Mullion Heater Sensor mode by selecting SW3. (**01** = Sensor Operation On, **02** = Sensor Operation Off) Heater on 100%

Service Test - 41 Horizontal Mullion Heater Status

Control the Horizontal Mullion Heater selecting SW3 (toggle between ON and OFF) (**01** = ON, **02** = OFF)

Service Test - 42 UI EEPROM Control Software Version

NOTE: Not normally used.

Displays in three sequential flashes the Dispenser UI Control software version on the UI display.

NOTE: This is repeatedly displayed at all times in this step. 00/00/00 to 99/99/99

Service Test - 43 UI FLASH Control Software Version

NOTE: Not normally used.

Displays in three sequential flashes the Dispenser UI Control software version on the UI display.

NOTE: This is repeatedly displayed at all times in this step. 00/00/00 to 99/99/99

NOTE: See the user guide for details on how to calibrate water flow from the dispenser.

W10873261E

©2019 All rights reserved.

FOR SERVICE TECHNICIAN'S USE ONLY

W10873261E **Assy : W10873263E**

W10873261E **Assy : W10873263E**

Schematic

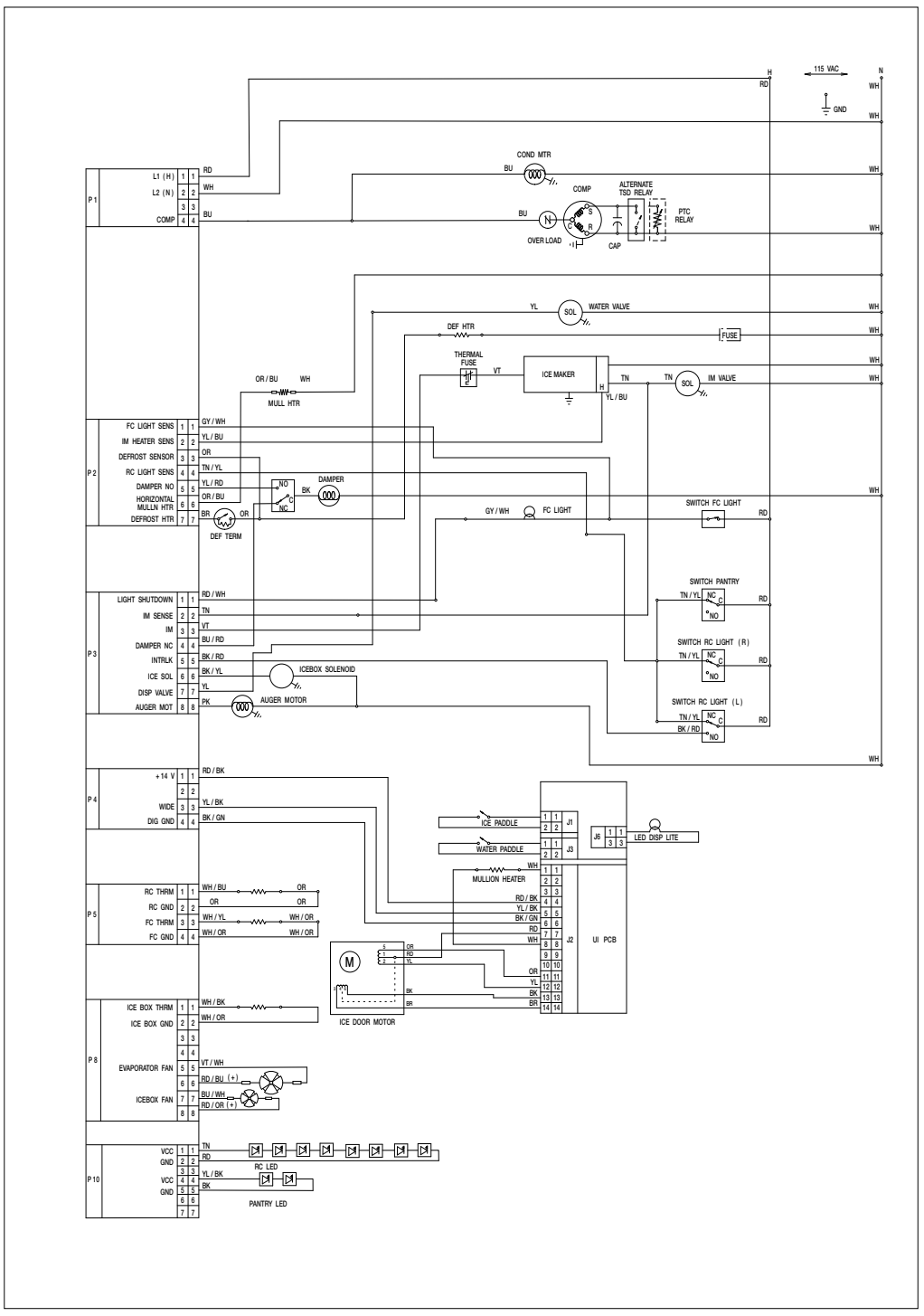

		FROM	TO	VOLTAGE	CONDITIONS
APPLICATION CONTROL UNIT (ACU)	P1	P1-1	P1-2	115 VAC	CONSTANT 115VAC
		P1-3	NOT USED		
		P1-4	P1-2	115VAC	COMPRESSOR/ CONDENSER FAN ON OR SERVICE STEP 4 - 01
	P2	P2-1	P1-2		FC DOOR WHEN OPEN
		P2-2	P1-2		ICE MAKER HEATER FEEDBACK WHEN HEATER IS OFF
		P2-3	P1-2		DEFROST HEATER BIMETAL CLOSED AND DEFROST HEATER ON. OR SERVICE STEP 6 & SHOULD SHOW 01
		P2-4	P1-2		RC SWITCH INPUT WHEN RC DOORS ARE OPEN
		P2-5	P1-2		AIR BAFFLE IS OPEN OR SERVICE STEP 3 - 01
		P2-7	P1-2		DEFROST HEATER BI-METALCLOSED & DEFROST HEATER ON OR SERVICE STEP 6 & SHOULD SHOW 01
	P3	P3-1	P1-1		FC LAMP TIMEOUT RELAY WHEN FC DOOR OPEN <10 MIN
		P3-2	P1-2		ICEMAKER WATER VALVE ACTIVATED OR SERVICE STEP 25
		P3-3	P1-2		ICE MAKER POWERED UP (0V IF RELAY ON CONTROL IS OPEN)
		P3-4	P1-2		AIR BAFFLE IS CLOSED OR SERVICE STEP 3 - 02
		P3-5	P1-1		INTERLOCK WHEN LEFT DOOR IS CLOSED
		P3-6	P1-2		ICEBOX SOLENOID WHEN ICE PADDLE PRESSED & CUBES SELECTED ON UI
		P3-7	P1-2		WATER VALVE WHEN WATER DISPENSE PADDLE IS PRESSED
		P3-8	P1-2		ICE MAKER AUGER MOTOR WHEN ICE PADDLE PRESSED
	P4	P4-1		14V	CONSTANT 14V FOR UI
		P4-2	NOT USED		
		P4-3		DATA	COMMUNICATION
		P4-4		GND	GROUND
	P5	P5-1	P5-2	5V	RC THERMISTOR = 1.5-5VDC
		P5-3	P5-4		FC THERMISTOR = 1.5-5VDC
	P8	P8-1	P8-2		ICE BOX THERMISTOR = 1.5-5VDC
		P8-5	P8-6	14V	EVAPORATOR FAN WHEN DOOR IS CLOSED AND COOLING
		P8-7	P8-8	14V	ICE BOX FAN WHEN DOORS CLOSED AND COOLING
	P10	P10-1	P10-2	24V	RC LEDS (CONSTANT CURRENT =350mA)
USER INTERFACE (UI)		FROM	TO	VOLTAGE	CONDITIONS
	J1	J1-1	J1-2	14VDC	ICE DISP PADDLE
		J1-1	J1-3	14VDC	ICE DISP PADDLE LIGHT
	J2	J2-1	J2-8	14VDC	VERTICAL MULLION HEATER WHEN ON
		J2-4		14VDC	CONSTANT 14V FROM ACU
		J2-5		DATA	COMMUNICATION
		J2-6		GND	GROUND
		J2-7	J2-11	14VDC	ICE DOOR STEPPER MOTOR WHEN ACTIVE
		J2-7	J2-12	14VDC	ICE DOOR STEPPER MOTOR WHEN ACTIVE
		J2-7	J2-13	14VDC	ICE DOOR STEPPER MOTOR WHEN ACTIVE
		J2-7	J2-14	14VDC	ICE DOOR STEPPER MOTOR WHEN ACTIVE
	J3	J3-1	J3-2	14VDC	WATER DISPENSER PAD
		J3-1	J3-3	14VDC	WATER DISPENSER LIGHT
	J6	J6-1	J6-3	14VDC	UI DISPENSER LIGHT

Wiring Diagram

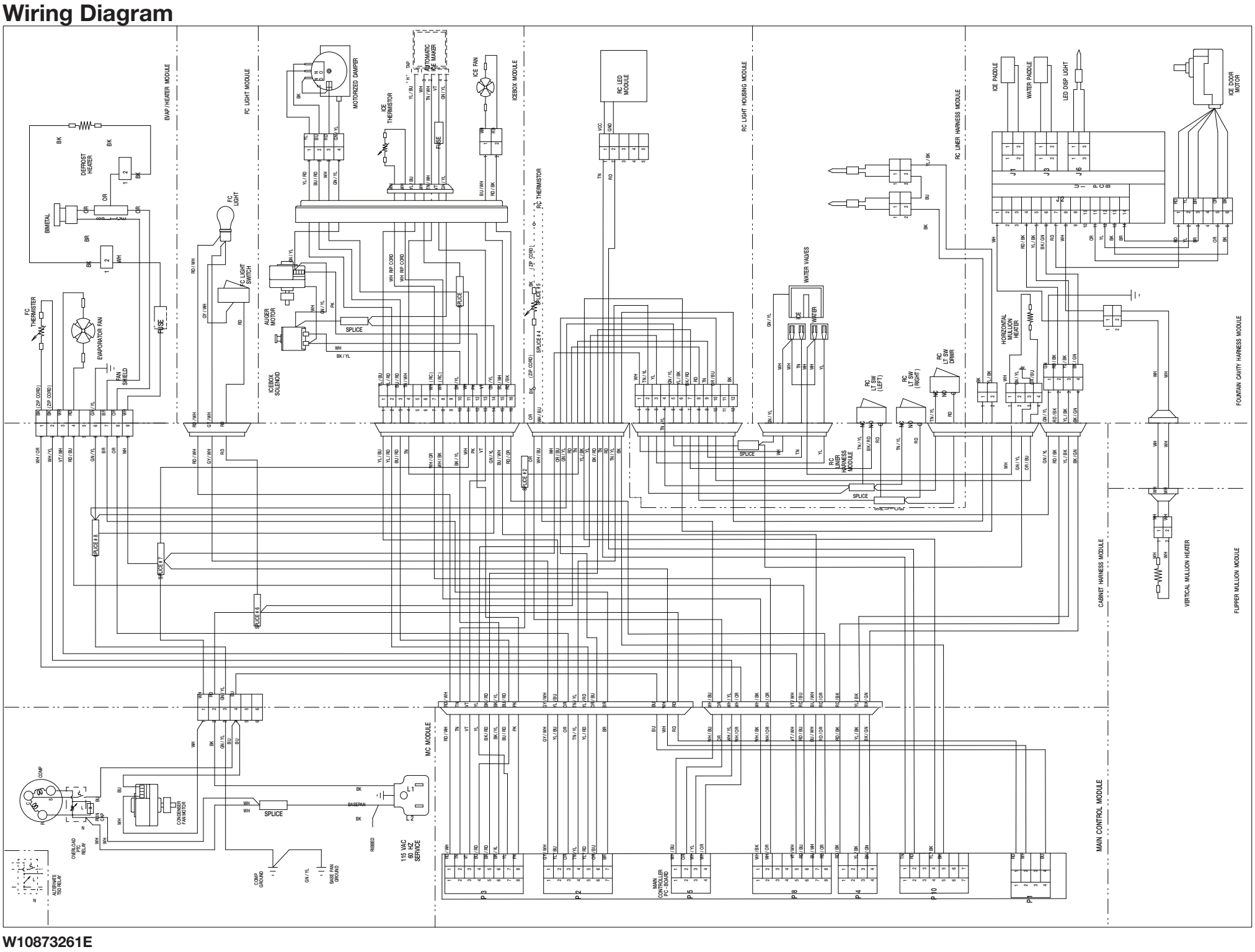

W10873261E

©2019 All rights reserved.

06/19