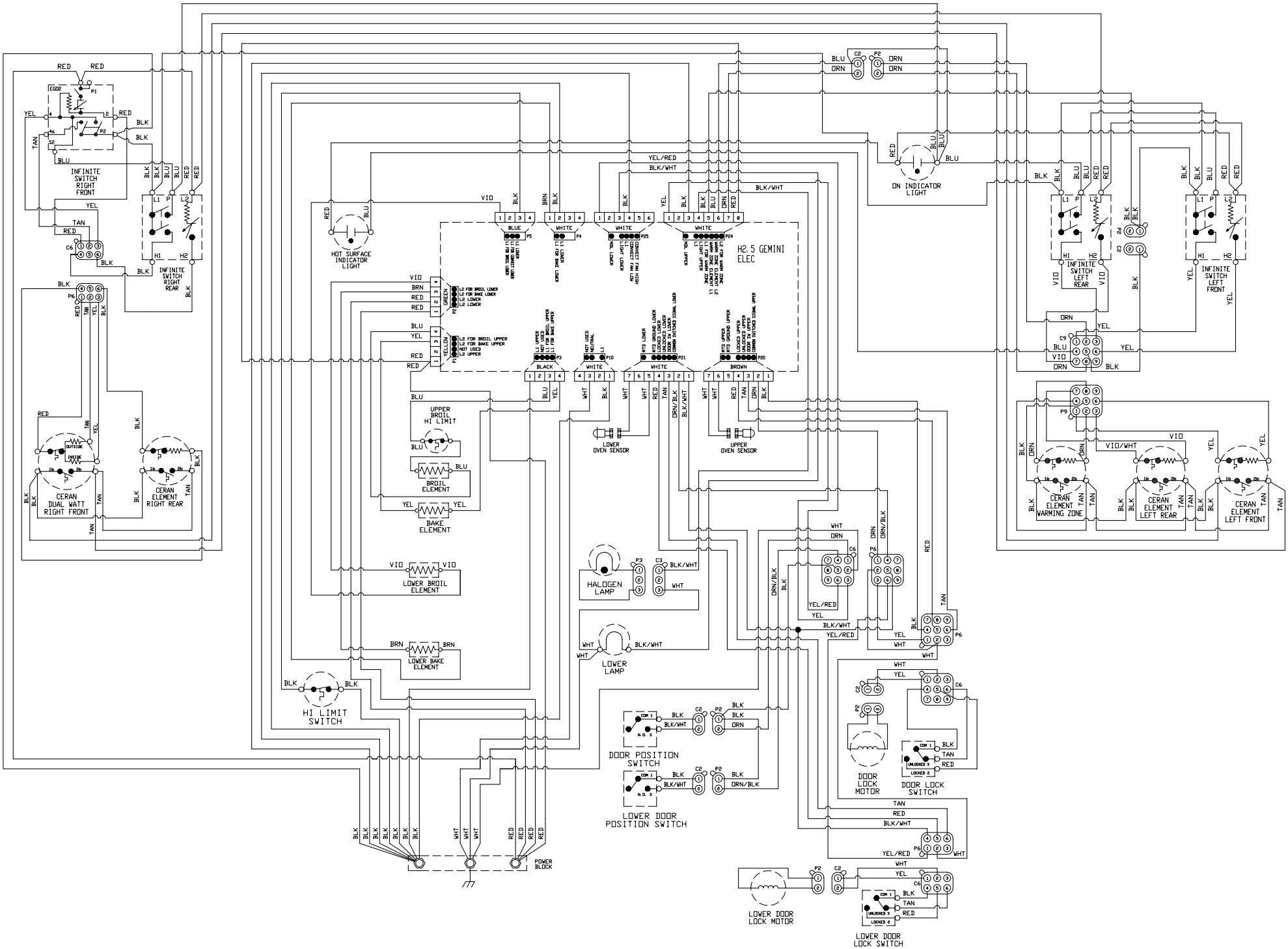

PART NO. W10257149 A

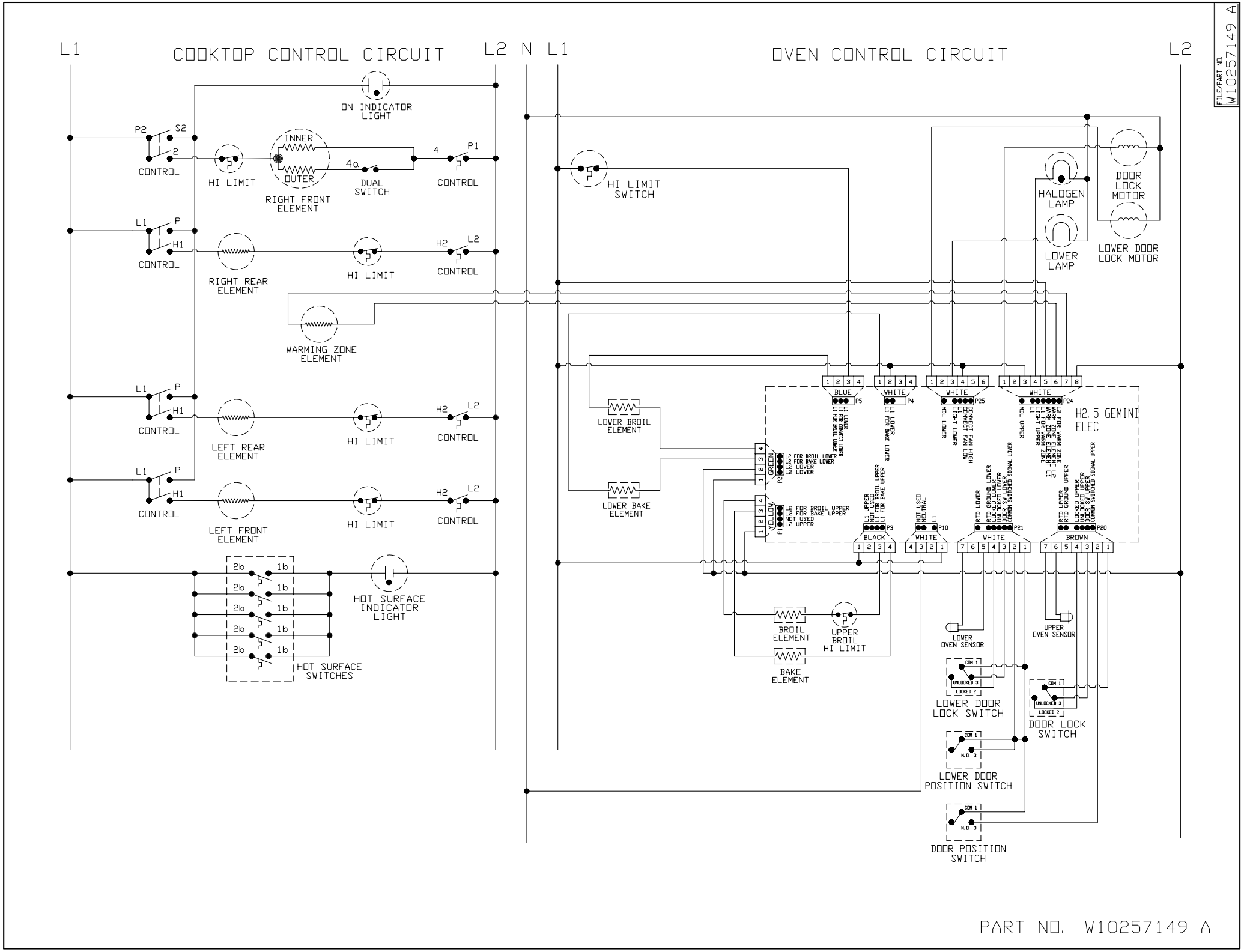

PART NO. W10257149 A