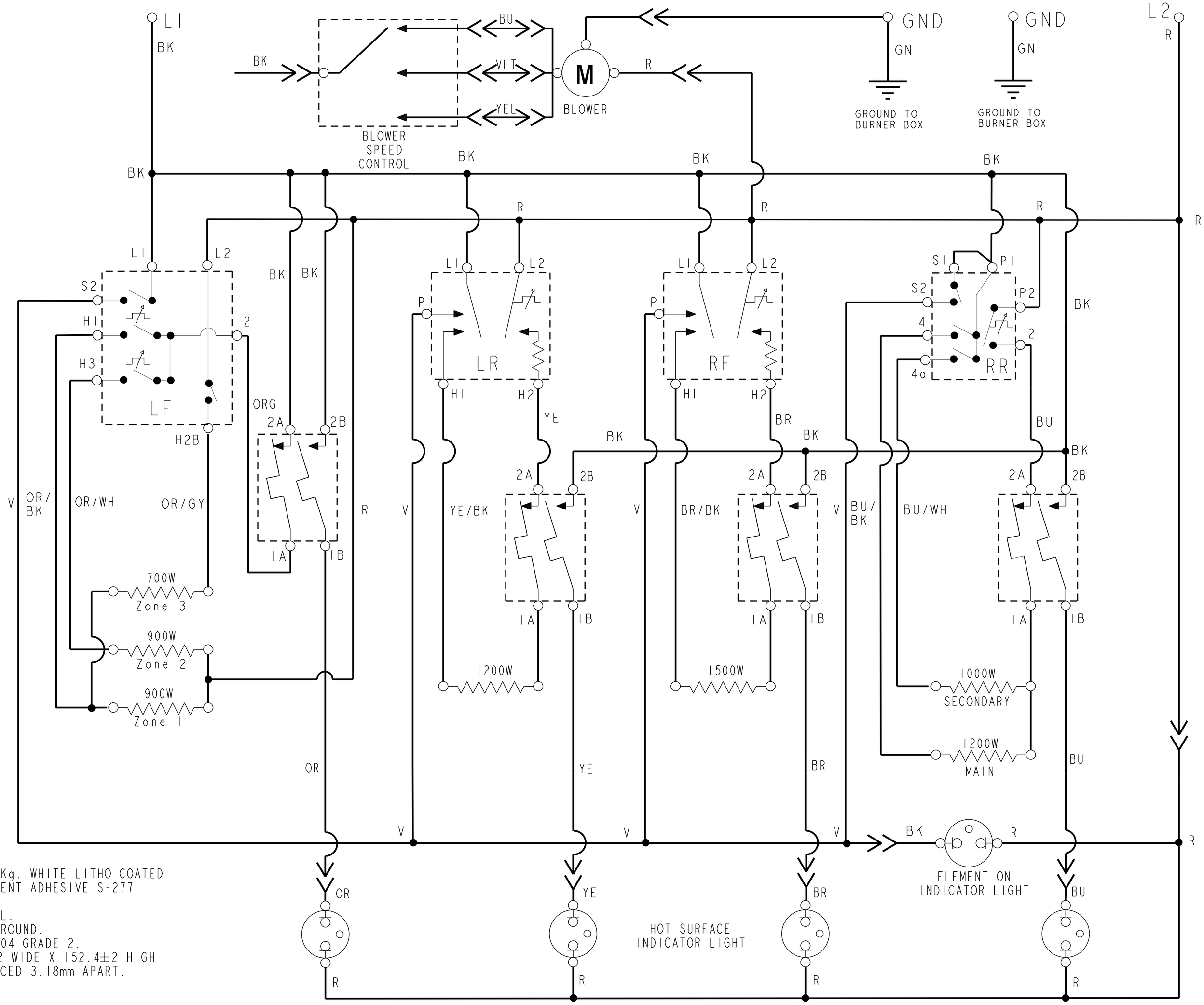

.22 Kg. WHITE LITHO COATED
RMANENT ADHESIVE S-277

ROVAL.
ACKGROUND.
CP-004 GRADE 2.
.5±2 WIDE X 152.4±2 HIGH
SPACED 3.18mm APART.

FORM TO
4.
ON LABEL.
L.
EMENTS OFF.
URE IS HOT
TURNS ON
DIANT
H. THE HOT
TINUE TO
S IS HOT,
TURNED OFF.

8286428	REL	KECD866R
PART NO.	**REV.**	**DESCRIPTION**

DATABASE CODE: PRO/E

USA

= CONTROL CHARACTERISTIC