SXS - 25 DISPENSER-FILTER

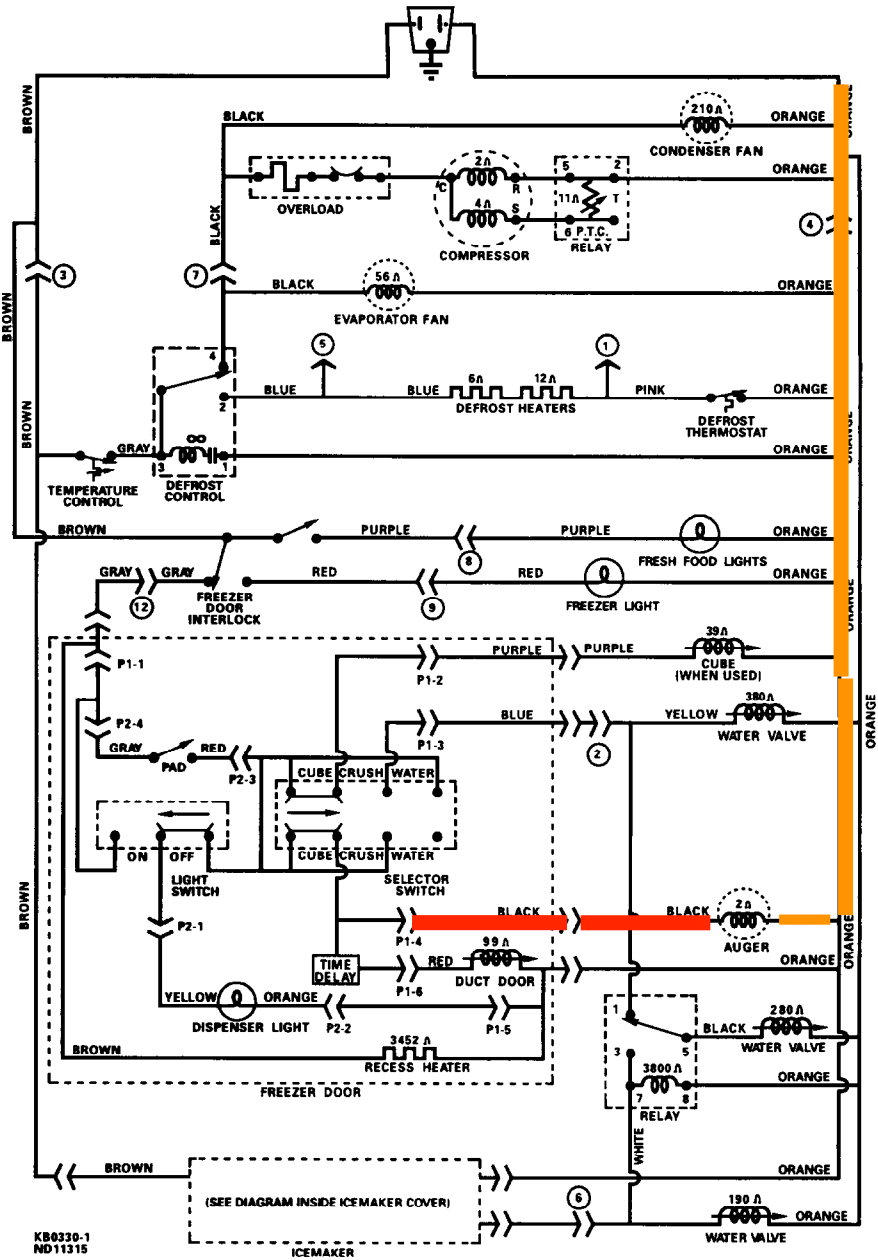

197D1071P014

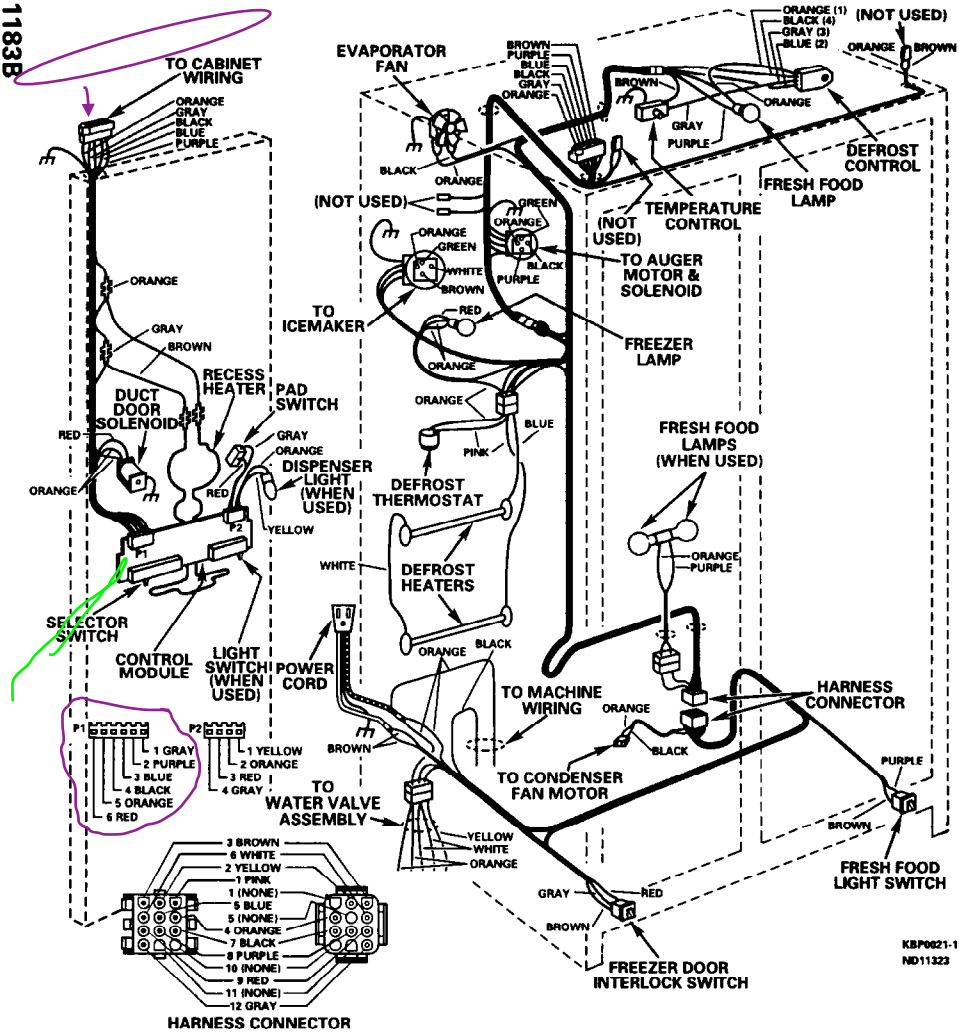
TO CABINET WIRING
ORANGE
GRAY
BLACK
BLUE
PURPLE
EVAPORATOR FAN
BROWN
PURPLE
BLUE
BLACK
GRAY
ORANGE
BLACK
ORANGE
(NOT USED)
GREEN
ORANGE
ORANGE
GREEN
WHITE
BROWN
BLACK
PURPLE
TO ICEMAKER
RED
ORANGE
ORANGE (1)
BLACK (4)
GRAY (3)
BLUE (2)
(NOT USED)
ORANGE
BROWN
BROWN
ORANGE
GRAY
PURPLE
DEFROST CONTROL
FRESH FOOD LAMP
TEMPERATURE CONTROL
(NOT USED)
TO AUGER MOTOR & SOLENOID
FREEZER LAMP
ORANGE
GRAY
BROWN
RECESS HEATER
PAD SWITCH
DUCT DOOR SOLENOID
RED
GRAY
ORANGE
DISPENSER LIGHT (WHEN USED)
ORANGE
RED
YELLOW
P1
P2
SELECTOR SWITCH
CONTROL MODULE
LIGHT SWITCH (WHEN USED)
ORANGE
BLUE
PINK
DEFROST THERMOSTAT
FRESH FOOD LAMPS (WHEN USED)
WHITE
DEFROST HEATERS
ORANGE
PURPLE
ORANGE
BLACK
POWER CORD
TO MACHINE WIRING
HARNESS CONNECTOR
ORANGE
BLACK
BROWN
TO CONDENSER FAN MOTOR
PURPLE
TO WATER VALVE ASSEMBLY
YELLOW
WHITE
ORANGE
BROWN
FRESH FOOD LIGHT SWITCH
GRAY
RED
BROWN
FREEZER DOOR INTERLOCK SWITCH
KBP0021-1
ND11323
P1
1 GRAY
2 PURPLE
3 BLUE
4 BLACK
5 ORANGE
6 RED
P2
1 YELLOW
2 ORANGE
3 RED
4 GRAY
3 BROWN
6 WHITE
2 YELLOW
1 PINK
1 (NONE)
5 BLUE
5 (NONE)
4 ORANGE
7 BLACK
8 PURPLE
10 (NONE)
9 RED
11 (NONE)
12 GRAY
HARNESS CONNECTOR

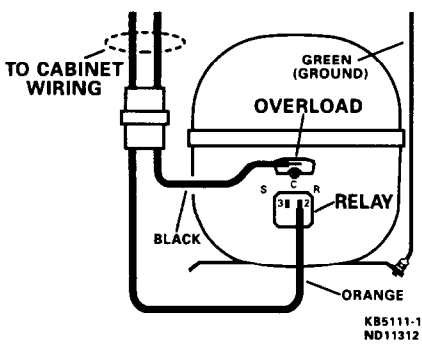
TO CABINET WIRING
GREEN (GROUND)
OVERLOAD
S
C
R
RELAY
BLACK
ORANGE
KB5111-1
ND11312

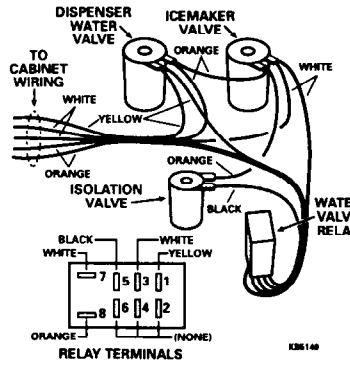
DISPENSER WATER VALVE
ICEMAKER VALVE
TO CABINET WIRING
ORANGE
WHITE
WHITE
YELLOW
ORANGE
ORANGE
ISOLATION VALVE
BLACK
WATER VALVE RELAY
BLACK
WHITE
WHITE
YELLOW
7
5
3
1
8
6
4
2
ORANGE
(NONE)
RELAY TERMINALS
KB5140

DISCONNECT POWER CORD BEFORE SERVICING
IMPORTANT - RECONNECT ALL GROUNDING DEVICES
All parts of this appliance capable of conducting electrical current are grounded. If grounding wires, screws, straps, clips, nuts or washers used to complete a path to ground are removed for service, they must be returned to their original position and properly fastened.

ELECTRICAL SPECIFICATIONS

Temperature Control (Position 5)	7-(-11)°F
Defrost Control	16 hrs @ 35 min
Defrost Thermostat	60-28°F
Electrical Rating: 115V. AC 60Hz.	11.6 Amp
Maximum Current Leakage	0.50 mA.
Maximum Ground Path Resistance	0.14 Ohms
Energy Consumption	84 KWH/mo.

NO LOAD PERFORMANCE

Control Position **MID/MID**

and Ambient of:	70°F	90°F
Fresh Food, °F	32 - 40	33 - 41
Frozen Food, °F	(-4) - 10	(-4) - 4
Run Time, %	<45%	<70%

REFRIGERATION SYSTEM

Refrigerant Charge (R134a)	5¼ ounces
Compressor	1159 BTU/hr
Minimum Compressor Capacity	22 inches
Minimum Equalized Pressure	
@ 70°F	48 PSIG
@ 90°F	60 PSIG

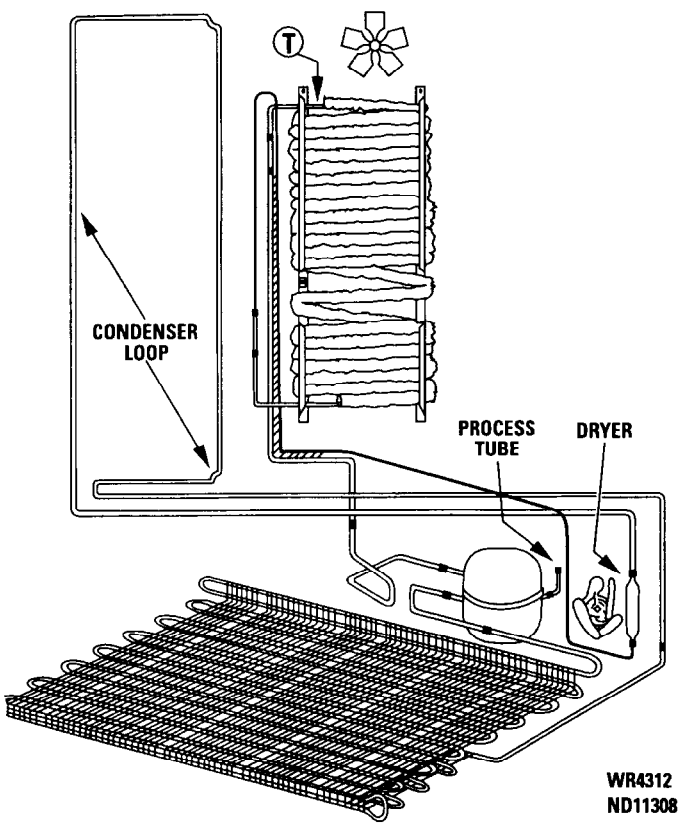

IMPORTANT SAFETY NOTICE
This information is intended for use by individuals possessing adequate backgrounds of electrical, electronic and mechanical experience. Any attempt to repair a major appliance may result in personal injury and property damage. The manufacturer or seller cannot be responsible for the interpretation of this information, nor can it assume any liability in connection with its use.

INSTALLATION

Clearance must be provided for air circulation:

AT TOP	1 inch
AT SIDES	5/8-inch
AT REAR	1-inch

AIR FLOW

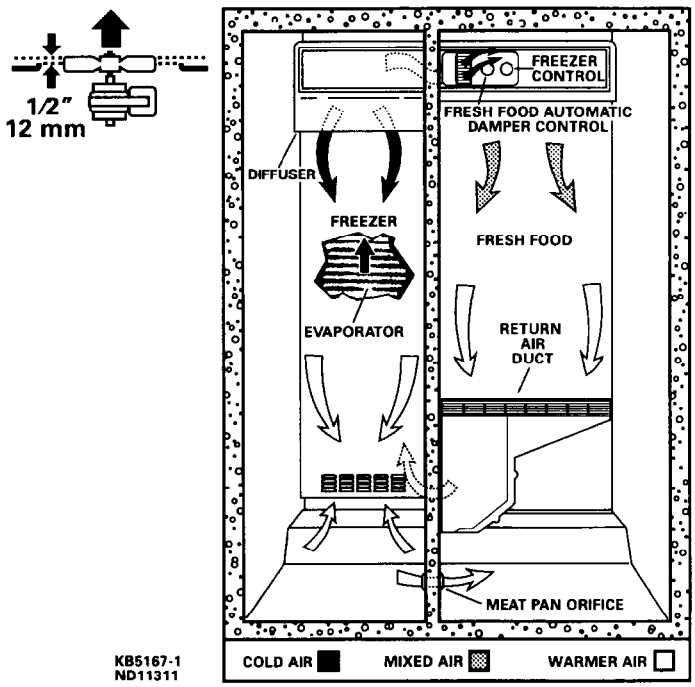

REPLACEMENT PARTS

Temperature Control	WR09X0599
Relay	WR07X0277
Overload	WR08X10006
Defrost Control	WR09X0489
Defrost Thermostat	WR50X0122
Defrost Heaters & Harness	WR51X0443
Condenser Fan Motor	WR60X10010
Evaporator Fan Motor	WR60X10007