OVEN SCHEMATIC

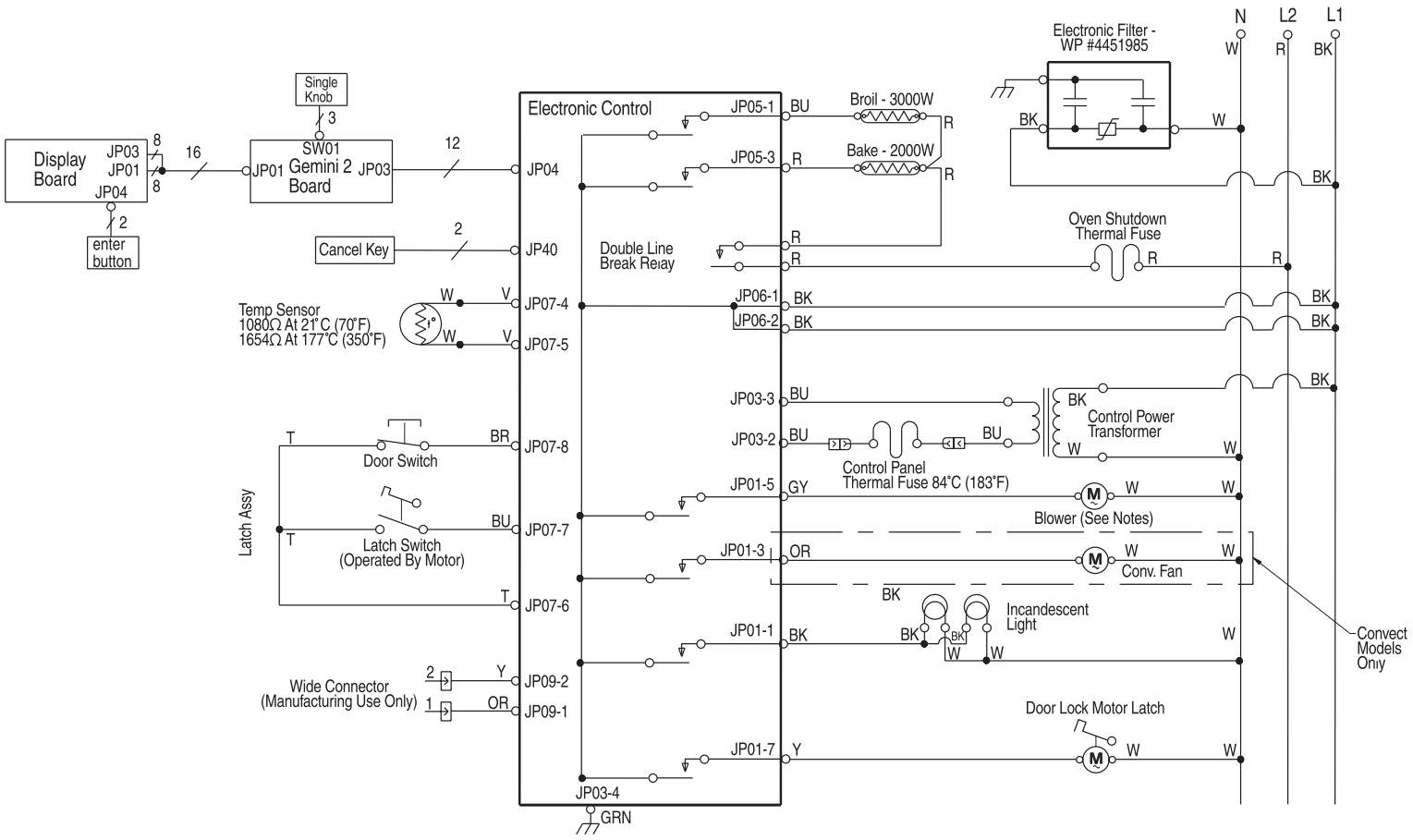

COMPONENT KEY

GROUND (CHASSIS)	RELAY COIL	ENCLOSED THERMISTOR
PLUG WITH FEMALE CONNECTOR	RELAY CONTACTS	OPERATED BY DOOR
RECEPTACLE WITH MALE CONNECTOR	HEATING ELEMENT	OPERATED BY HAND
LIGHT	AC MOTOR LATCH	THERMAL FUSE/T.O.D.
AC DRIVE MOTOR		

NOTES:

- Blower remains off until oven reaches 88° C (190° F) and may continue running up to 45 minutes after oven has turned off.
- Dots indicate connections.
- Circuit shown in Standby/Off mode with oven door closed.