SERVICE INFORMATION — DO NOT REMOVE

IMPORTANT SAFETY NOTICE
THIS INFORMATION IS INTENDED FOR USE BY INDIVIDUALS POSSESSING ADEQUATE BACKGROUNDS OF ELECTRICAL, ELECTRONIC AND MECHANICAL EXPERIENCE. ANY ATTEMPT TO REPAIR A MAJOR APPLIANCE MAY RESULT IN PERSONAL INJURY AND PROPERTY DAMAGE. THE MANUFACTURER OR SELLER CANNOT BE RESPONSIBLE FOR THE INTERPRETATION OF THIS INFORMATION, NOR CAN IT ASSUME ANY LIABILITY IN CONNECTION WITH ITS USE.

DISCONNECT POWER BEFORE SERVICING
IMPORTANT – RECONNECT ALL GROUNDING DEVICES
IF GROUNDING WIRES, SCREWS, STRAPS, CLIPS, NUTS, OR WASHERS USED TO COMPLETE A PATH TO GROUND ARE REMOVED FOR SERVICE, THEY MUST BE RETURNED TO THEIR ORIGINAL POSITION AND PROPERLY FASTENED.

⚠ WARNING



Certain internal parts are intentionally not grounded and may present a risk of electric shock only during servicing. Service personnel – **DO NOT** contact the following parts while the appliance is energized: ***water valve, main pump, drain pump and active vent motor (if present).***

WASHABILITY COMPLAINTS

Hot Water – Ample supply of water at 120°F minimum temperature is necessary. Do not use dishwasher soon after using clothes washer or filling bathtub.

Loading – Consult Owner's Manual on loading procedures.

Amount of Water – Make sure dishwasher is level. Check water level, allowing dishwasher to fill normally for first fill. The water level should be to the center of the bottom of the float dome. If water level is low, check for clogged screen in water valve and check float switch.

Detergent Module Leakage – Some moisture in cup is normal. Detergent must not be soaking wet, oozing out and down the inner door panel. If a leak is detected, check detergent module door lid, latch operation, and gasket seal.

Proper Amount of Detergent – Use full detergent cup of fresh detergent in hard water. Use only enough detergent to get good wash performance in soft water.

Rinse Agent – Use rinse agent if spotting is a problem.

Water Valve – Check valve for intermittent operation. Valve coil can be direct tested. Allow to heat normally, then check to see if coil opens.

Spray Arm – Check to be sure spray arm spins freely and jets are not clogged.

Float Switch – Manually open the switch several times by lifting the float stem and ensure the switch closes. If not, replace the switch.

FILTER AND DRAIN SYSTEM

Will Not Pump Out

1. Enter service mode and check drain pump operation (see service mode).
2. Check cover inlet (Figure 3) in the bottom of the tub. Make sure that it is clear of food particles.
3. Check for blocked or partially blocked drain line and air gap.
4. Check routing of drain hose system. It must be free from kinks.
5. Remove lower spray arm (Figure 3).
6. Remove main conduit mounting screw (Figure 3).
7. Lift main conduit tab, pull and rotate main conduit out of hub (Figure 3).
8. Remove the cover inlet, check sump and drain outlet (Figure 3). It may be blocked by a toothpick or other object.
9. Check drain pump valve (Figure 1) for correct operation. Water should flow only from the pump to the drain hose.
10. Drain line check valve (Figure 1) must pass water in the drain line direction only.

MOTOR-PUMP MECHANISM

Motor Stalled-Hums

1. Disconnect Power. Try to turn motor shaft clockwise to determine if seal is stuck and can be broken loose. If motor shaft cannot be turned, cutter blade may be bound up. Proceed to step 2.
2. On inside of dishwasher, remove the cover inlet (Figure 3) and reach down into the sump (Figure 1). Check for blockages such as bone, wire ties, etc. If it contains debris, clean thoroughly. If motor shaft cannot be turned, remove mechanism.

To Remove Motor-Pump Mechanism:

1. Remove cover inlet (Figure 3). With syringe, remove all water from sump (Figure 3).
2. Loosen main pump clamp and pump connector clamp (Figure 1).
3. Remove hanger that holds motor to tub frame (Figure 1).
4. Disconnect wires to the main motor and to the wax motor.
5. Motor-pump mechanism can now be removed from under dishwasher.

Important: Make sure to replace the plastic ball in pump housing on reassembly.

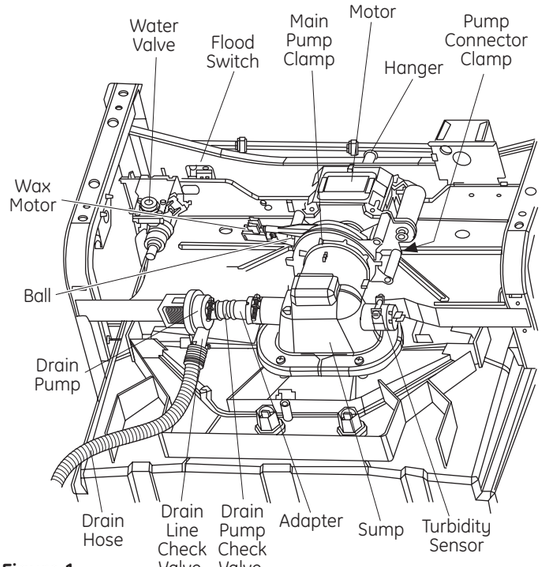

Figure 1

TO SERVICE WASH ARM ASSEMBLIES:

Check Wash Arms

1. Check holes in spray arm for bits of china, seeds and other foreign matter.
2. Check spray arms for rotation.

To Disassemble Mid-Level Arm (Figure 2):

1. Pull upper rack all the way out.
2. Remove nut on bottom of mid arm. This will allow the mid arm and bearing to be removed.
3. To remove conduit, remove screw (some models) from hub. Press tab on side of mid bracket to release the hub and mid conduit.
4. To reinstall arm, reverse procedure.
   NOTE: Mid arm to be installed with spray jets facing the upper rack. Bearing to be placed between nut and bottom of mid arm.

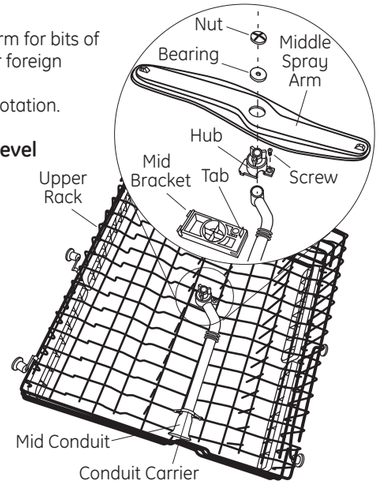

Figure 2

To Remove Lower Arm and Fine Filter Assembly (Figure 3):

1. Remove lower rack from dishwasher.
2. Gently lift and rotate lower spray arm counter clockwise to remove.
3. Rotate nut hub counterclockwise to remove. Gently lift fine filter assembly up. Remove fine filter drain from sump.
4. Clean fine filter screen if soil is present.
5. To reinstall fine filter and lower spray arm reverse procedure.

NOTE: When installing fine filter make sure the drain port of the filter is engaged with the drain for the fine filter.

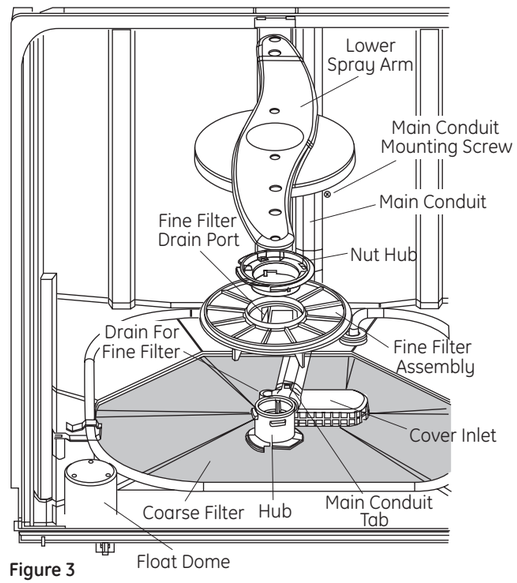

Figure 3

CALROD® HEATING ELEMENT

To Remove Heating Element (Figure 4):

1. Disconnect Power and remove wire leads from heating element.
2. Unscrew two heating element nuts.
3. Remove heating element supports.
4. Lift and remove heating element.

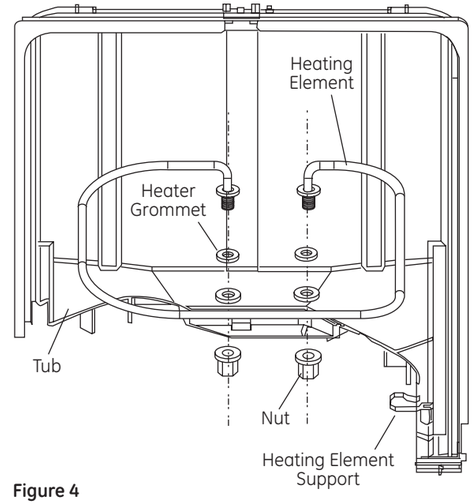

Figure 4

DOOR COMPONENTS (Figure 5)

The door components are accessible by removing three screws from each side of inner door and two screws at the bottom of the door. Carefully separate the inner door panel from the outer door panel. Disconnect HMI and 3-digit connector to completely remove the outer door panel. The active vent flapper can be accessed by removing the screws on the fan housing. HMI must be reconnected prior to restoring power.

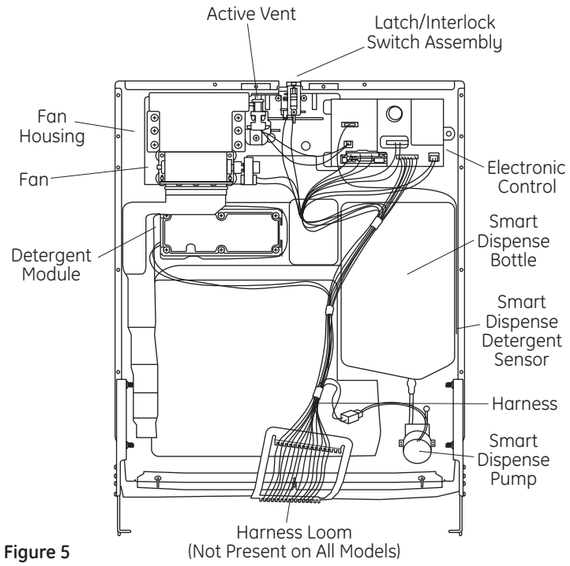

Figure 5

165D6290G059

FLASHING DISPLAY LIGHTS	
Status Indicator Lights	***What It Means***
START/RESET	Cycle has been interrupted by pressing the ***START/RESET*** keypad. Light will quit flashing after the dishwasher automatically drains out the water.

THIS DISHWASHER IS PROGRAMMED WITH A SERVICE MODE TO AID THE TECHNICIAN IN TROUBLESHOOTING THE DISHWASHER. EACH COMPONENT MAY BE CYCLED TO DETECT IF IT IS FUNCTIONING CORRECTLY. COMPONENTS ARE CYCLED BY PRESSING KEYPADS TO THE RIGHT OR LEFT OF THE START/RESET KEYPAD.

TO ENTER SERVICE MODE:
PRESS AND HOLD THE DOWN ARROW KEYPAD AND THEN PRESS THE HEATED DRY KEYPAD SIMULTANEOUSLY FOR 3 SECONDS.

7-BUTTON TOP CONTROL PANEL



TO EXIT SERVICE MODE:
PRESS THE START/RESET KEYPAD AT ANYTIME TO EXIT.

Service Mode Test Matrix*

Keypad PAD	Description	Time
1L	Activates/Deactivates Heater & Fan	6 min.
2L	Not used for Service Mode	
3L	Activates/Deactivates Water Valve and Smart Detergent Dispenser	variable
4L	Activates/Deactivates Detergent cup	variable
5L	Activates/Deactivates Auxilliary Pump	variable
6L	Activates/Deactivates Main Pump and Single Rack Wash motor	variable

***NOTE : Service mode may be used for 30 minutes maximum. After 30 minutes the service mode will automatically turn off.**

Component may be deactivated by pressing the same keypad that was pressed to activate the component. Pressing another component's keypad will deactivate the original keypad's components.

VOYANTS CLIGNOTANT	
Voyants d'état	***Ce qu'il veut dire***
START/RESET	Le cycle a été interrompu en appuyant sur la touche **START/RESET**. Le voyant arrête de clignoter après la vidange au tomatique de l'eau.

CE LAVE-VAISSELLE EST PROGRAMMÉ AVEC UN MODE DE SERVICE POUR AIDER LE TECHNICIEN PENDANT LE DÉPANNAGE. IL EST POSSIBLE DE METTRE EN MARCHE ET D'ARRÊTER CHAQUE ELEMENT POUR DÉTERMINER S'IL FONCTIONNE CORRECTEMENT. POUR METTRE EN MARCHE ET ARRÊTER CHAQUE ÉLÉMENT, APPUYER SUR LES TOUCHES À DROITE OU À GAUCHE DE LA TOUCHE START/RESET.

POUR ENTRER EN MODE D'ENTRETIEN – APPUYER SUR LA TOUCHE DE FLÉCHE VERS LE BAS ET SIMULTANÉMENT APPUYER PENDANT 3 SECONDES SUR LA TOUCHE DE SÉCHAGE À CHAUD « HEATED DRY ».

PANNEAU DE COMMANDE SUPÉRIEUR À 7 TOUCHES



POUR SORTIR DU MODE D'ENTRETIEN – APPUYER SUR LA TOUCHE START/RESET A N'IMPORTE QUEL MOMENT POUR SORTIR DU MODE.

Matrice de test de mode d'entretien*

Clavier Touche	Description	Durée
1L	Active et désactive le chauffage et le ventilateur	6 min.
2L	Pas utilisé	
3L	Active et désactive le robinet d'eau et le distributeur de détergent intelligent	variable
4L	Active et désactive le distributeur de détergent	variable
5L	Active et désactive la pompe auxiliaire	variable
6L	Active et désactive la pompe principale et le moteur de lavage à une seule clayette	variable

***REMARQUE – Il est possible d'utiliser le mode d'entretien pendant un maximum de 30 minutes. Après 30 minutes, le mode d'entretien s'arrête automatiquement.**

Les éléments peuvent être désactivés en appuyant sur le même clavier utilisé pour activer les éléments. Appuyer sur le clavier d'un autre élément désactive les éléments du clavier initial.

⚠ WARNING:
POWER MUST BE DISCONNECTED BEFORE SERVICING THE APPLIANCE.

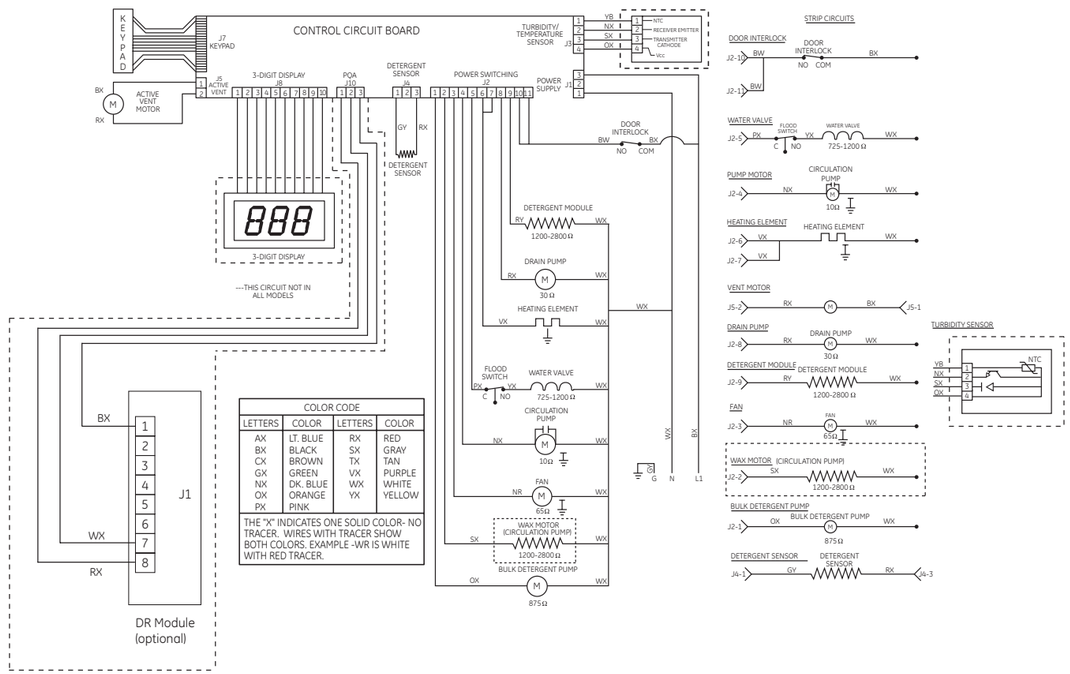

⚠ ATTENTION:
IL FAUT DÉBRANCHER L'ALIMENTATION AVANT TOUTE INTERVENTION SUR L'APPAREIL.

