Training Bulletin

OCTOBER 2005

GE DISHWASHERS
2005 Model Introductions

INTRODUCTION

New model GE dishwashers have been introduced with the following design changes:

- Door Interlock Assembly
- Door Handle/Latch Assembly
- Air Diverter (Vent) Assembly
- Control Board
- HMI Board
- Door Hinge

The models below are **MEMBRANE** control dishwashers:

EDW6000L	**GHDA656L**	**GLD6300L**
EDW6060L	**GLD6200L**	**GLD6360L**
GHDA650L	**GLD6260L**	**GLD6500L**



Membrane Dishwasher

These models are **TACTILE** control dishwashers:

EDW5000L	**GLD4160L**	**GLD5500L**
EDW5060L	**GLD4200L**	**GLD5560L**
GHDA450L	**GLD4250L**	**GLD5800L**
GHDA455L	**GLD4260L**	**GLD5850L**
GLD4100L	**GLD4300L**	**GLD5860L**
GLD4150L	**GLD4360L**	



Tactile Dishwasher

HANDLE/LATCH ASSEMBLY

To access the new handle/latch assembly, do the following:

1. Remove the screws from the inner door liner.
2. Carefully separate the inner liner and outer door panel by shifting the inner door liner to clear the vent assembly.
3. Latch the inner door panel to the tub, while leaving open the outer door panel to access the components.
4. Remove the escutcheon brace located at the top of the door.

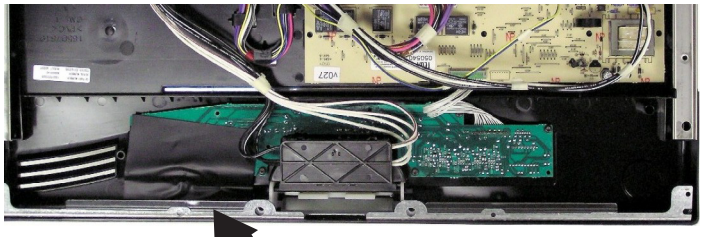

BRACE

GE Appliances
General Electric Company
Louisville, Kentucky 40225

GE CONFIDENTIAL AND PROPRIETARY INFORMATION – NOT FOR PUBLIC DISCLOSURE

Removal of Door Interlock Assembly

The door interlock assembly is located at the top center section of the inner door.

To remove the interlock assembly:

1. Remove the interlock cover by lifting up the two front tabs.

Caution: When removing the plunger, the spring is not secured and will pop off. To secure, place your hand over the spring when removing the plunger.

2. Remove the plunger and the spring.

Note: When replacing the plunger, make sure the flat side of the tab is facing up.

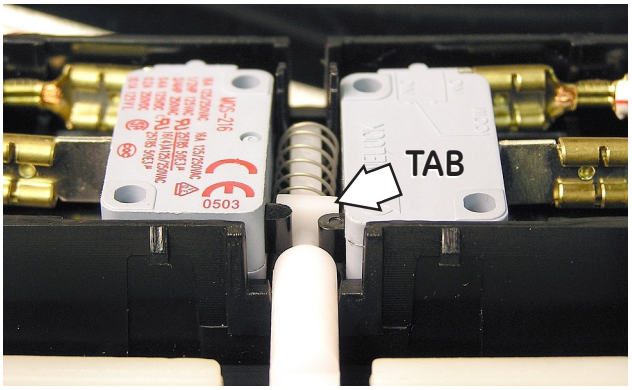

3. Lift up the interlock switches to remove. These switches are replaceable (Part No. WD21X10224).

Removal of Handle/Latch Assembly



The handle/latch assembly consists of 4 parts:

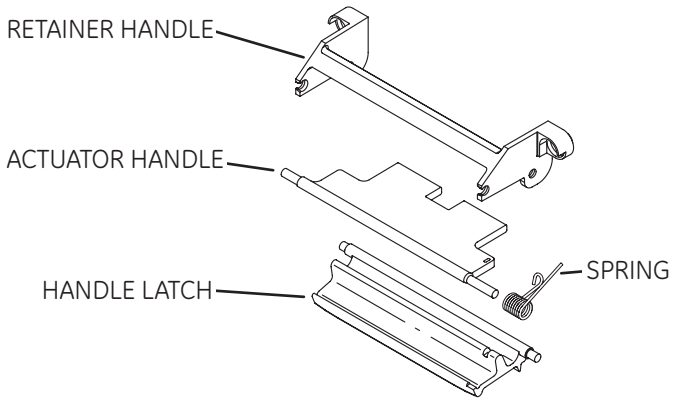

Notice the location of the spring for reassembly:

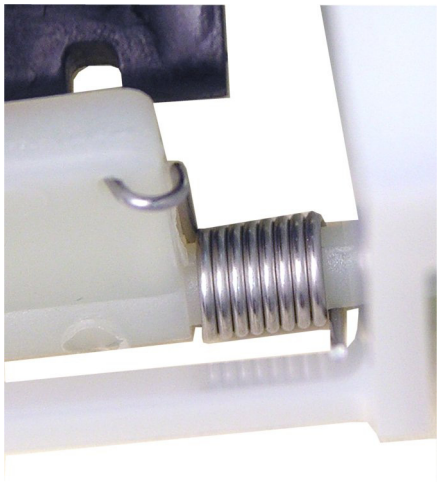

Note: When assembling, the pins on the actuator handle snap into the retainer handle after the spring has been positioned.

From the outside of door, squeeze the handle latch while *pushing* the handle assembly up and out of door. With your other hand, *pull* the assembly out while pushing up from the other side.

