Disassembly Procedures

⚠ WARNING To avoid risk of electrical shock, personal injury, or death, disconnect power to unit before servicing.

Agitator

1. Open loading door.
2. Remove fabric softener dispenser by unsnapping from agitator. Remove agitator by one of two ways.
   a. (Auger style agitators) Loosen bolt in agitator and remove by sliding straight up output shaft of transmission.
   b. (Flex vane agitators) Remove flex vane agitator by placing hands under agitator lip and pull upward. If agitator is difficult to remove, use two agitator removal hooks, No. 254PRP under bottom edge of agitator. Remove drive bell by pulling upward. If drive bell is difficult to remove, use agitator hooks.

a.

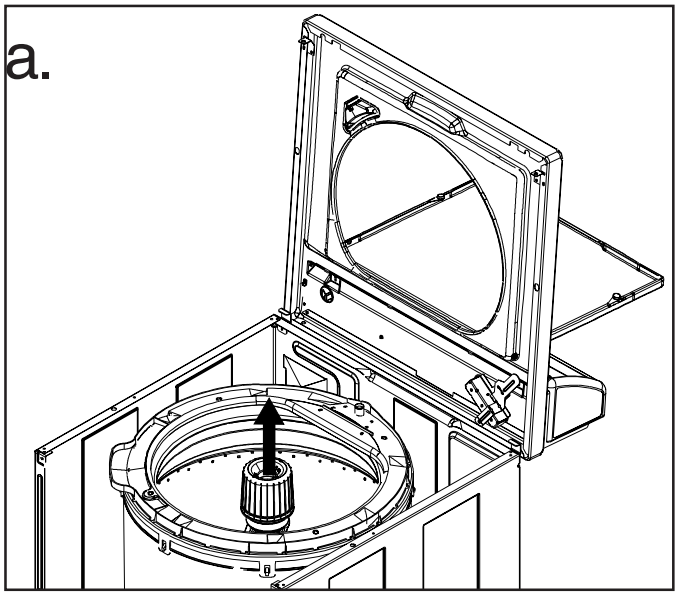

a.

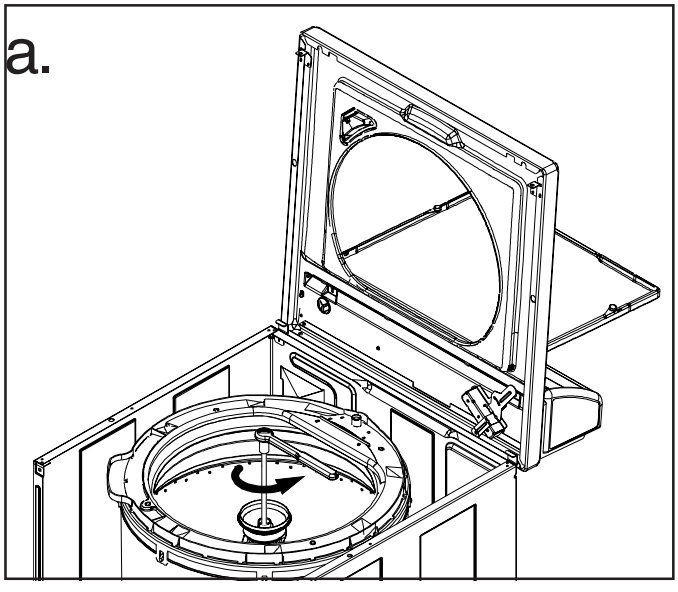

b.

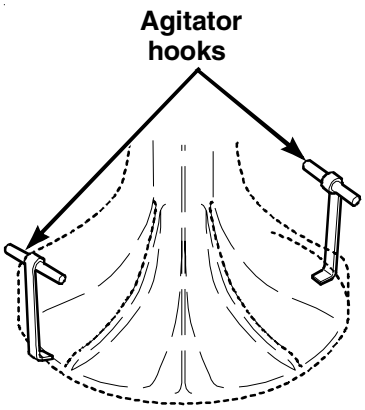

NOTE: Hooks must be positioned 180° from each other, and must be placed under base of agitator near agitator vane for greater stability. If hooks are placed between the vane area, agitator damage may occur.

3. Using a rocking motion (side-to-side) carefully lift agitator up off drive bell.
4. To reassemble place agitator on top of drive bell. Slowly rotate agitator until fingers on underside of agitator line up with large slots on drive bell.
5. A sharp blow on top of agitator, with the palm of your hand, will force agitator down onto drive bell, allowing fingers on underside of agitator to lock under bottom edge of drive bell.

NOTE: Do not push agitator onto drive bell any further than necessary.

Door Switch

1. Remove front panel, see “Front Panel” procedure.
2. Remove screws securing cabinet top.
3. Tape loading door closed and lift cabinet top to a vertical position by hinging it on the rear hinges.

NOTE: Cabinet top is self supporting, a small chain may be used for additional support.

4. Disconnect wires from door switch.
5. Remove screw securing door switch assembly to underside of cabinet top.

NOTE: See appropriate wiring diagram when rewiring components.

6. Remove screws securing switch to switch holder.
7. Remove switch from switch holder.
8. Reverse procedure to reassemble.

Drive Bell and Seal Assembly Style Units

NOTE: If water is present in washtub, remove water before attempting to remove drive bell.

1. Remove agitator, see “Agitator” procedure.
2. Remove plug and $^{7}/_{16}$" bolt from top of drive bell.